kHz Range Crystal unit MC-146

SEIKO EPSON CORPORATION

Product name MC-146 75.000000 kHz 7.0 +20.0-20.0

Product Number / Ordering code Q14MC14620008xx

Please refer to the 5.Packing information about xx (last 2 digits)

Complies with EU RoHS directive Reference weight Typ.

1.Absolute maximum ratings

Parameter	Symbol	Min.	Typ.	Max.	Unit	Conditions / Remarks
Storage temperature	T_stg	-55	-	125	ºC	Storage as single product
Maximum drive level	GL	-	-	1.0	µW	

2.Specificatoins(characteristics)

Parameter	Symbol	Min.	Typ.	Max.	Unit	Conditions / Remarks
Nominal frequency	f_nom	-	75	-	kHz	
Operating temperature	T_use	-40	-	85	ºC	
Level of drive	DL	-	-	1.0	µW	
Frequency tolerance	f_tol	-20.0	-	+20.0	x 10^{-6}	+25ºC DL=0.1µW
Turnover temperature	Ti	20	25	30	ºC	
Parabolic coefficient	B	-	-	-0.04	x 10^{-6}/ºC^2	
Load capacitance	CL	-	7.0	-	pF	
Motional resistance (ESR)	R1	-	TBD	TBD	kΩ	
Motional capacitance	C1	-	TBD	-	fF	
Shunt capacitance	C0	-	TBD	-	pF	
Motional inductance	L1	-	TBD	-	kH	
Frequency aging	f_age	-5	-	5	x10^{-6} /yea	@+25ºC, First year

3.External dimensions (Unit: mm)

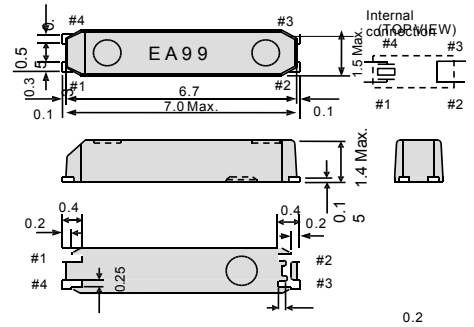

Do not connect #2 and #3 to external device.

The metal case inside of the molding compound may be exposed on the top or bottom of this product.
This purely cosmetic and does not have any effect on quality,
reliability or electrical specs.

4.Footprint(Recommended) (Unit: mm)

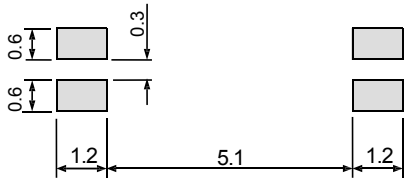

5.Packing information

[1]Product number last 2 digits code (xx) description The recommended code is "0X"

Q14MC14620008xx

Code	Condition	Code	Condition
01	Any Q'ty vinyl bag(Tape cut)	14	1000pcs / Reel
11	Any Q'ty / Reel	15	2000pcs / Reel
12	250pcs / Reel	00	3000pcs / Reel
13	500pcs / Reel	0X	9000pcs / Reel

[2] Taping specification

Subject to EIA-481 & IEC-60286

(1) Tape dimensions TE1604L

Material of the Carrier Tape : PS

Material of the Top Tape : PET+PE

Unit: mm

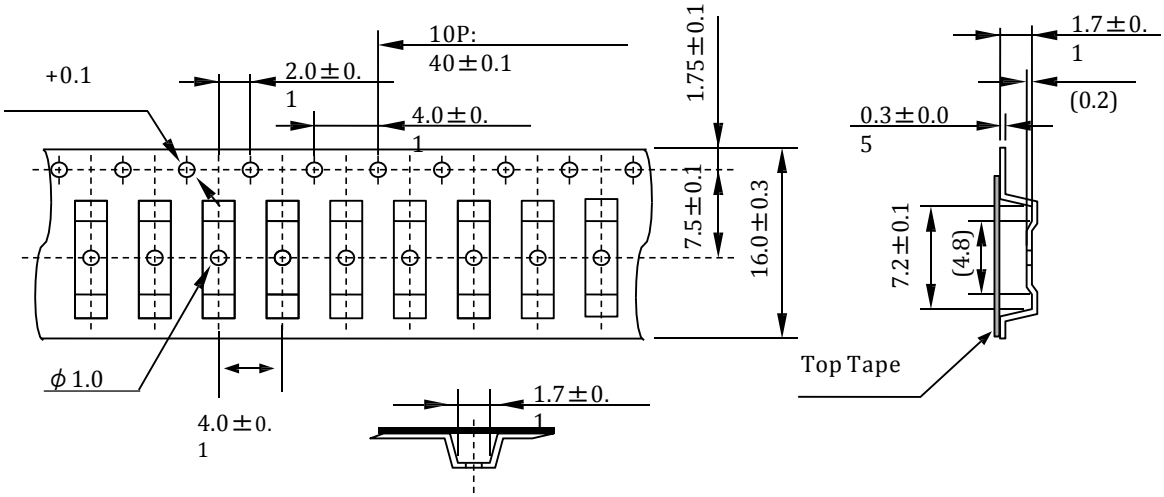

(2) Reel dimensions Material of the Reel : PS

Unit: mm

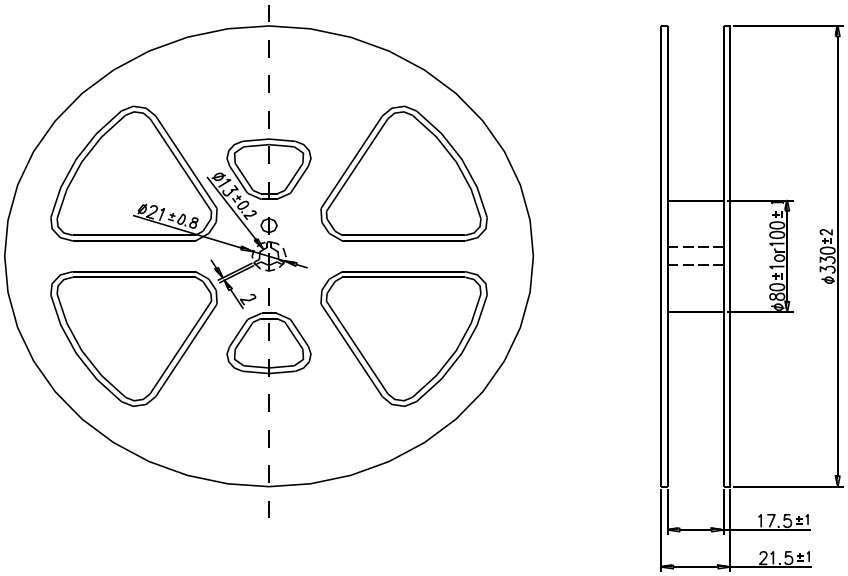

Reflow profile

Pre Heating
Temperature Tp1 ~
Tp2 = + 170 °C
Heating Temperature
TMlt = + 220 °C
Peek Temperature
TMax. = + 260 °C
Point of measuring
In case of Solder ability Terminal.
In case of Resistance to soldering heat Surface.

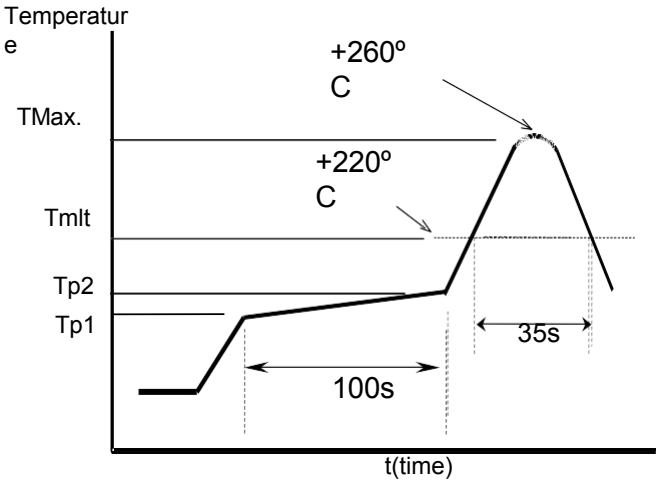

Notice

- This material is subject to change without notice.
- Any part of this material may not be reproduced or duplicated in any form or any means without the written permission of Seiko Epson.
- The information about applied data,circuitry, software, usage, etc. written in this material is intended for reference only.
  Seiko Epson does not assume any liability for the occurrence of customer damage or infringing on any patent or copyright of a third party.
  This material does not authorize the licensing for any patent or intellectual copyrights.
- When exporting the products or technology described in this material, you should comply with the applicable export control laws and regulations and follow the procedures required by such laws and regulations.
- You are requested not to use the products (and any technical information furnished, if any) for the development and/or manufacture of weapon of mass destruction or for other military purposes. You are also requested that you
  would not make the products available to any third party who may use the products for such prohibited purposes.
- These products are intended for general use in electronic equipment. When using them in specific applications that require
  extremely high reliability, such as the applications stated below, you must obtain permission from Seiko Epson in advance.
  / Space equipment (artificial satellites, rockets, etc.)
  / Transportation vehicles and related (automobiles, aircraft, trains, vessels, etc.)
  / Medical instruments to sustain life
  / Submarine transmitters
  / Power stations and related
  / Fire work equipment and security equipment
  / Traffic control equipment
  / And others requiring equivalent reliability.

- All brands or product names mentioned herein are trademarks and/or registered trademarks of their respective.

Contact us

http://www.XTAL.CC